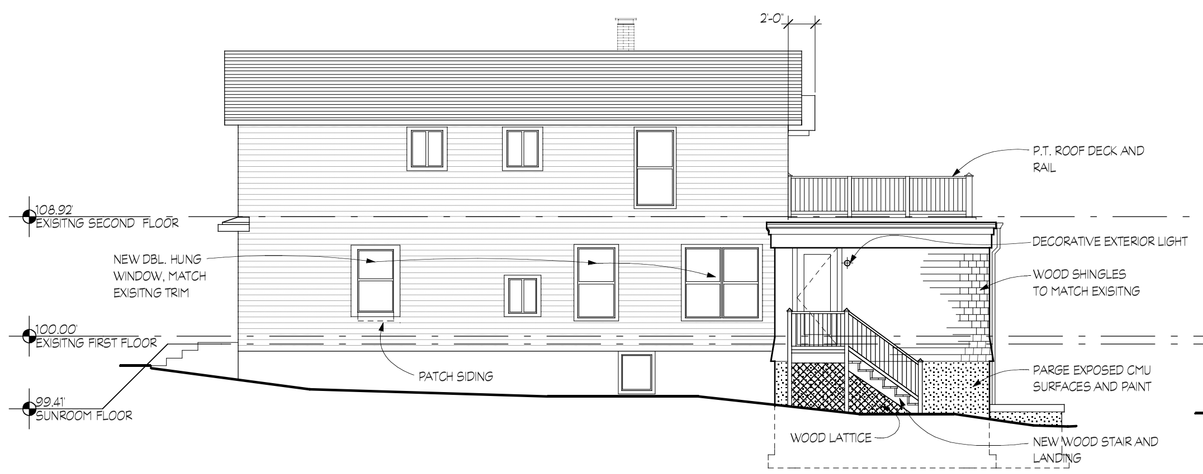

3 A2 EAST ELEVATION
SCALE 1/8"= 1'0"

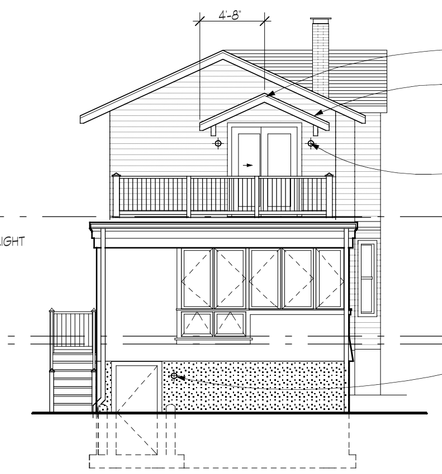

4 A2 NORTH ELEVATION
SCALE 1/8"= 1'0"

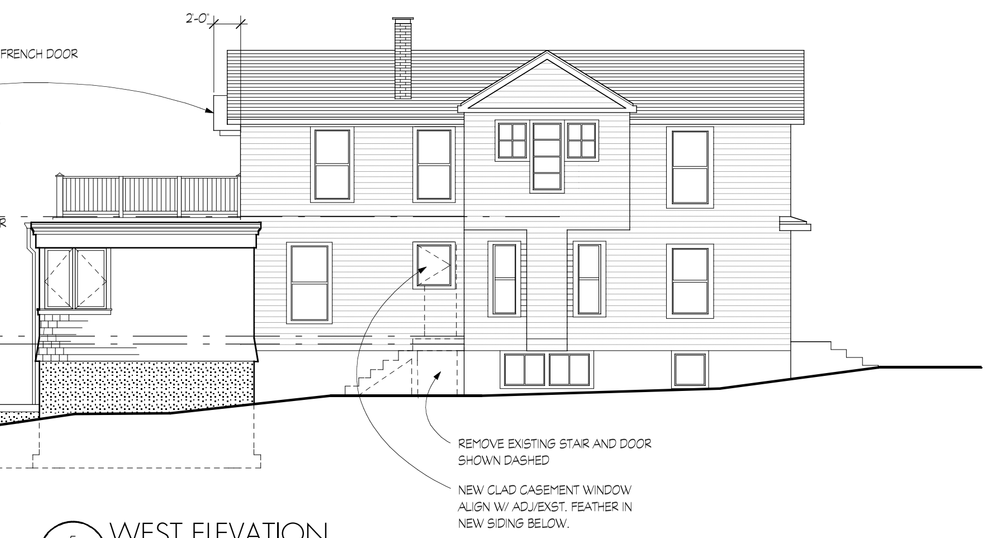

5 A2 WEST ELEVATION
SCALE 1/8"= 1'0"

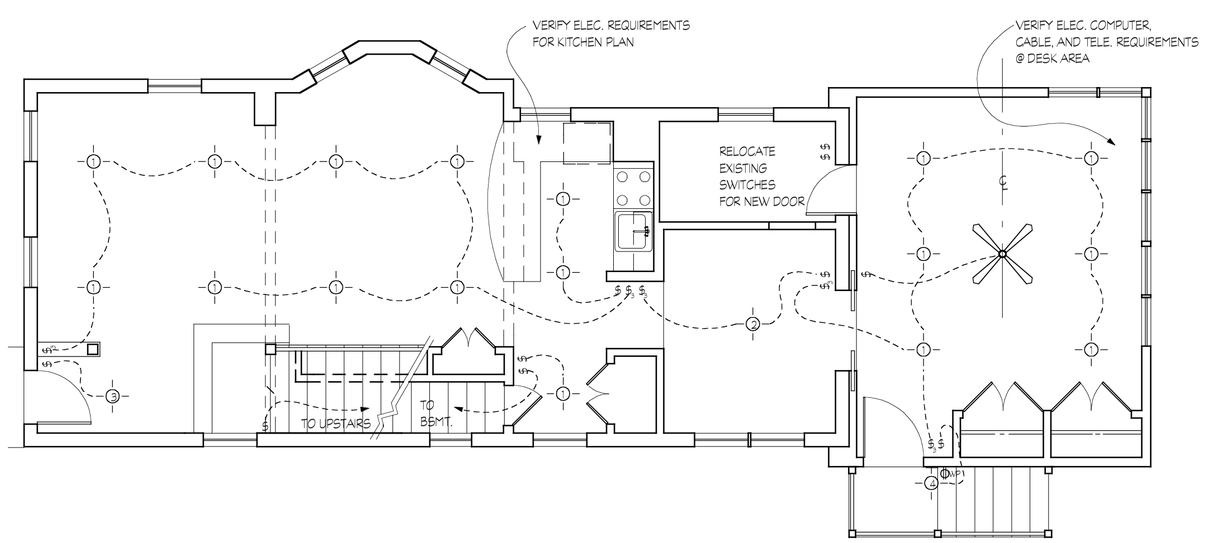

8 A2 FIRST FLOOR LIGHTING PLAN
SCALE 3/16"= 1'0"

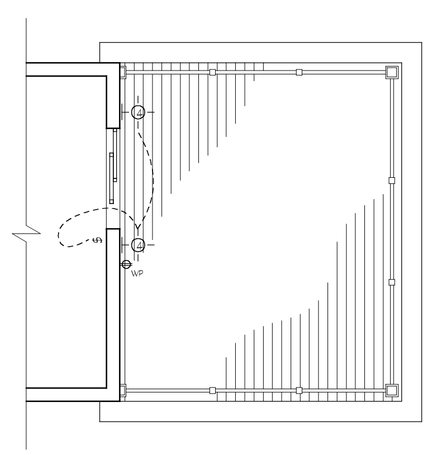

9 A2 SECOND FLOOR LIGHTING PLAN
SCALE 3/16"= 1'0"

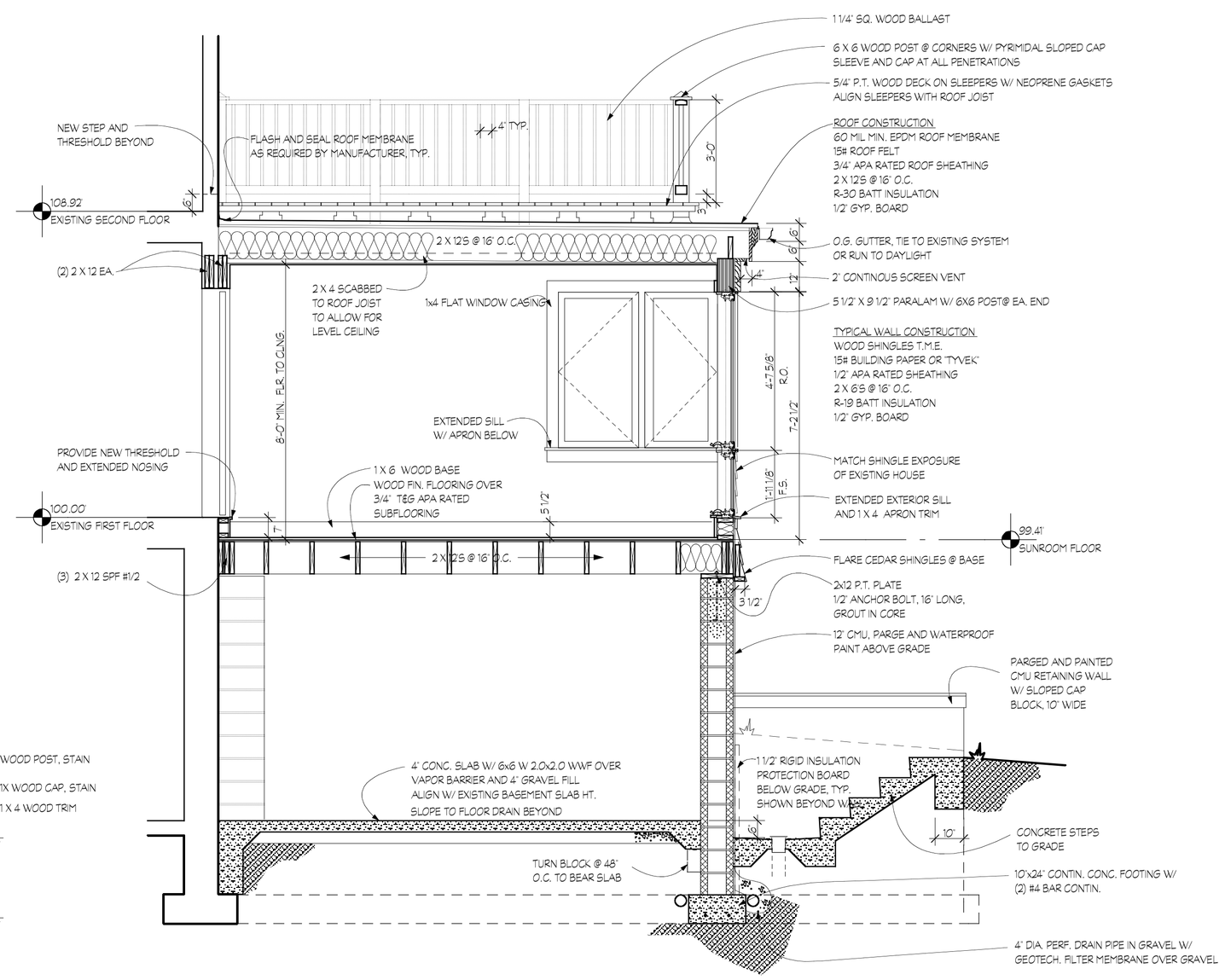

1 A2 SECTION THROUGH SUNROOM
SCALE 3/8"= 1'0"

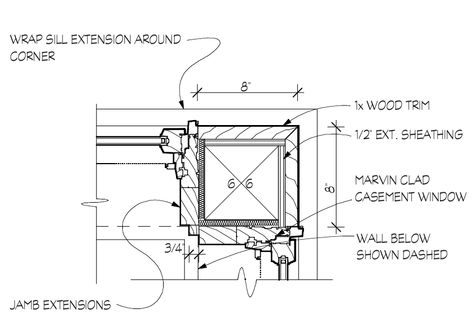

6 A2 PLAN DETAIL @ CORNER
SCALE 1 1/2"= 1'0"

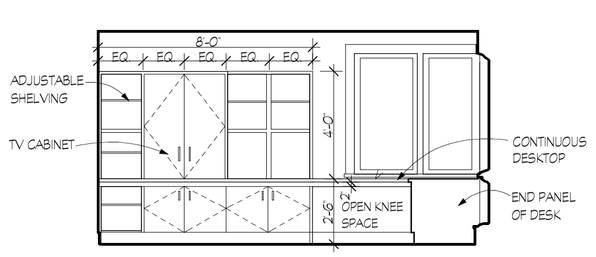

7 A2 SUNROOM INT. ELEVATION
SCALE 1/4"= 1'0"

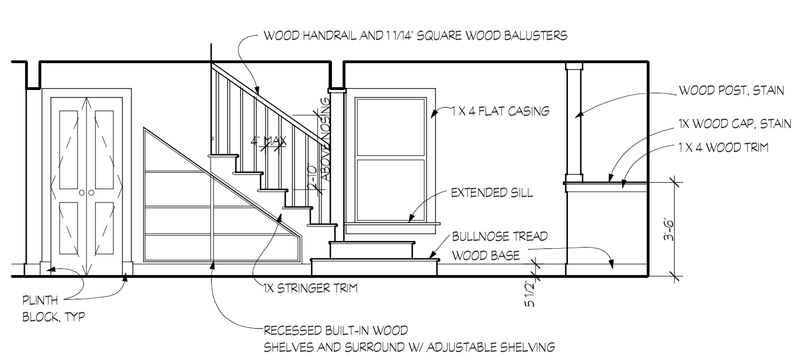

2 A2 INTERIOR ELEVATION
SCALE 1/4"= 1'0"

PANDE RESIDENCE
624 COLORADO AVE.
BALTIMORE, MARYLAND 21210

SECTIONS/ELEVATIONS

BMF/EG

20 SEPTEMBER 2000

A2